NOTRE DAME UNIVERSITY BANGLADESH

VLSI Design Lab Report-01

Course Code: CSE-4218
Course Title: VLSI Design Lab
Lab Task Topic: Setting Up DSCH2 & build logic gates

Submitted by:

Name: Istiak Alam
ID: 0692230005101005
Batch: CSE-20

Submission Date: January 17, 2026

Submitted to:

Nfisa Tabassum,
Lecturer, Dept. of CSE
Notre Dame University Bangladesh

Table of Contents

1 Introduction **1**

2 Logic Gate design in DSCH2 **1**

2.1 Inverter / NOT Gate 1
2.2 2-input NAND 2
2.3 3-input NAND 3
2.4 2-input NOR 4
2.5 3-input NOR 5
2.6 AND Gate 6
2.7 OR Gaate 7
2.8 2-input XOR 8

3 Conclusion **8**

1 Introduction

The objective of this experiment was to gain familiarity with the schematic-based Electronic Design Automation (EDA) tool DSCH2 and to design, simulate, and verify basic logic gates using CMOS logic. The lab focuses on the schematic representation of fundamental logic gates such as AND, OR, NOT, NAND, NOR, XOR and the functional verification using simulation. The schematic editor DSCH2 was used to create the gate designs and simulate their logical behavior.

2 Logic Gate design in DSCH2

2.1 Inverter / NOT Gate

A NOT gate, also known as an inverter, produces the complement of its input.

Truth Table

A	Y
0	1
1	0

Schematic Image

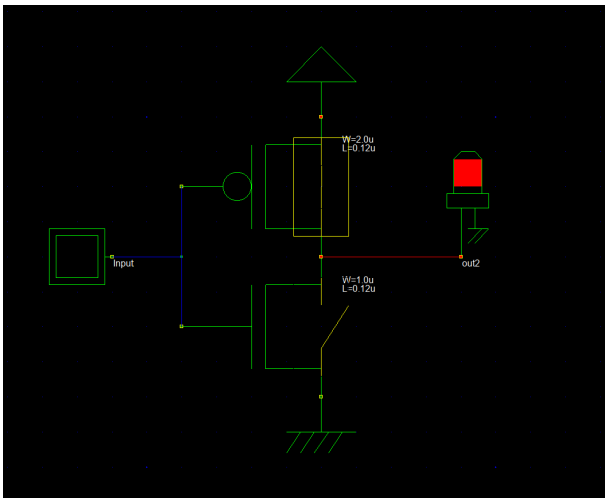

Figure 1: Schematic of the 1-input Inverter

Discussion

The NOT gate was implemented using a single CMOS inverter in DSCH2. Simulation confirmed correct inversion of the input signal.The inverter operated correctly, validating CMOS inverter design using DSCH2.

2.2 2-input NAND

A 2-input NAND gate is a universal logic gate that produces a logic LOW output only when both inputs are logic HIGH. For all other input combinations, the output remains logic HIGH. Due to its universality, complex digital circuits can be implemented using only NAND gates.

Truth Table

A	B	Y
0	0	1
0	1	1
1	0	1
1	1	0

Schematic Image

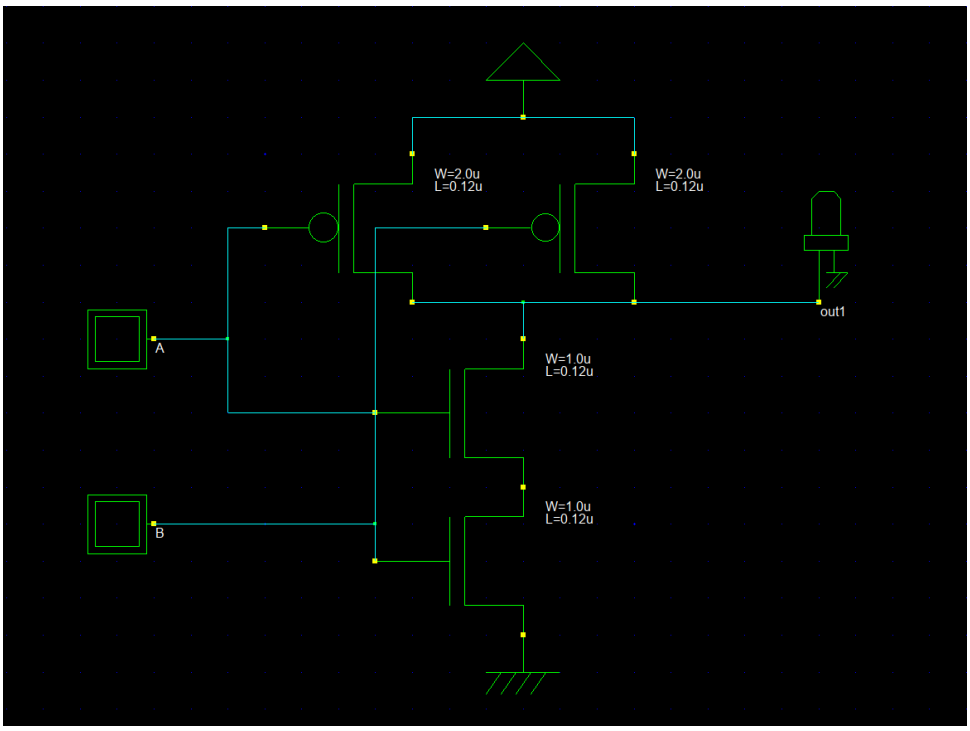

Figure 2: Schematic of the 2-input NAND

Discussion

The 2-input NAND gate was implemented in DSCH2 using CMOS logic. The pull-down network consists of two NMOS transistors connected in series, while the pull-up network consists of two PMOS transistors connected in parallel. Simulation results confirmed that the output becomes LOW only when both inputs are HIGH, validating the correct functionality of the design. The 2-input NAND gate was successfully designed and simulated using DSCH2. The output behavior matched the theoretical truth table, confirming the correctness of the schematic implementation.

2.3 3-input NAND

A 3-input NAND gate outputs a logic LOW only when all three inputs are logic HIGH. For any other input combination, the output remains logic HIGH.

Truth Table

A	B	C	Y
0	0	0	1
0	0	1	1
0	1	0	1
0	1	1	1
1	0	0	1
1	0	1	1
1	1	0	1
1	1	1	0

Schematic Image

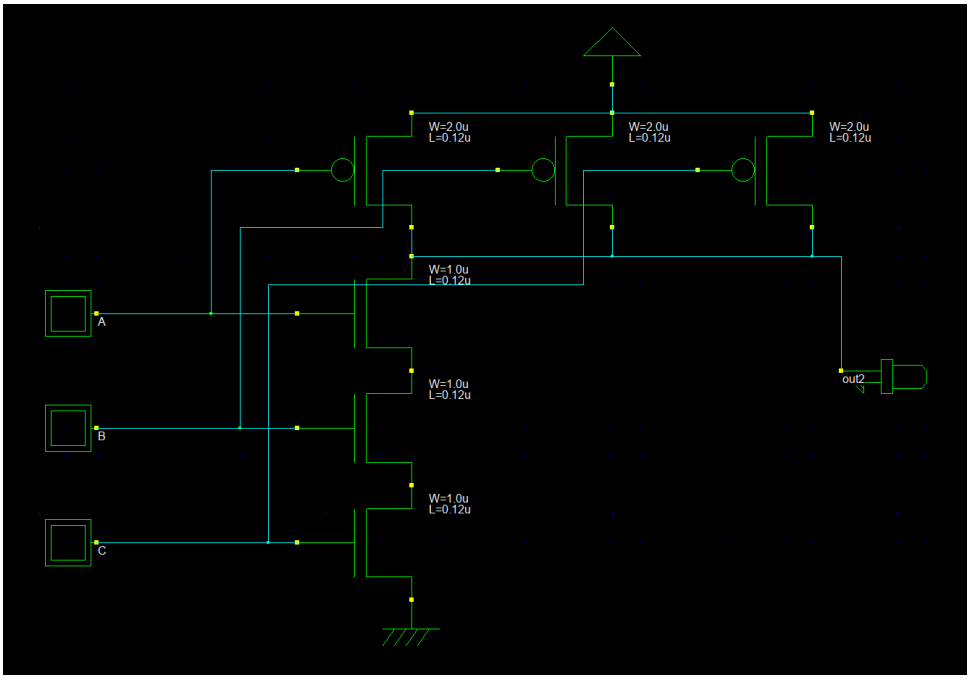

Figure 3: Schematic of the 3-input NAND

Discussion

The 3-input NAND gate was implemented in DSCH2 by extending the series NMOS and parallel PMOS structure. Simulation results showed that the output becomes LOW only when all three inputs are HIGH, confirming correct operation. The DSCH2 simulation verified the proper functioning of the 3-input NAND gate, demonstrating scalability of NAND-based logic design.

2.4 2-input NOR

A 2-input NOR gate produces a logic HIGH output only when both inputs are logic LOW. For all other input combinations, the output is logic LOW. NOR gates are also universal gates in digital logic design.

Truth Table

A	B	Y
0	0	1
0	1	0
1	0	0
1	1	0

Schematic Image

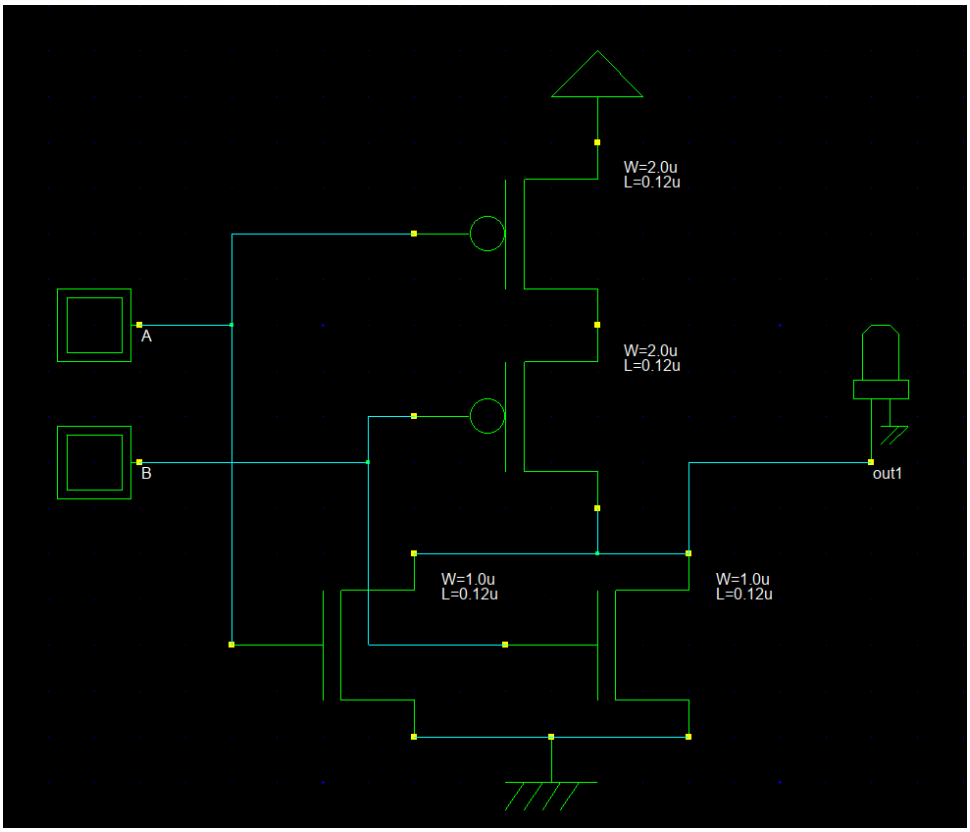

Figure 4: Schematic of the 2-input NOR

Discussion

In DSCH2, the NOR gate was designed using parallel NMOS transistors in the pull-down network and series PMOS transistors in the pull-up network. Simulation verified that the output remains HIGH only when both inputs are LOW, which matches the expected NOR logic behavior. The 2-input NOR gate design was correctly implemented and verified using DSCH2. The simulation results aligned with the theoretical truth table.

2.5 3-input NOR

A 3-input NOR gate produces a logic HIGH output only when all three inputs are logic LOW.

Truth Table

A	B	C	Y
0	0	0	1
0	0	1	0
0	1	0	0
0	1	1	0
1	0	0	0
1	0	1	0
1	1	0	0
1	1	1	0

Schematic Image

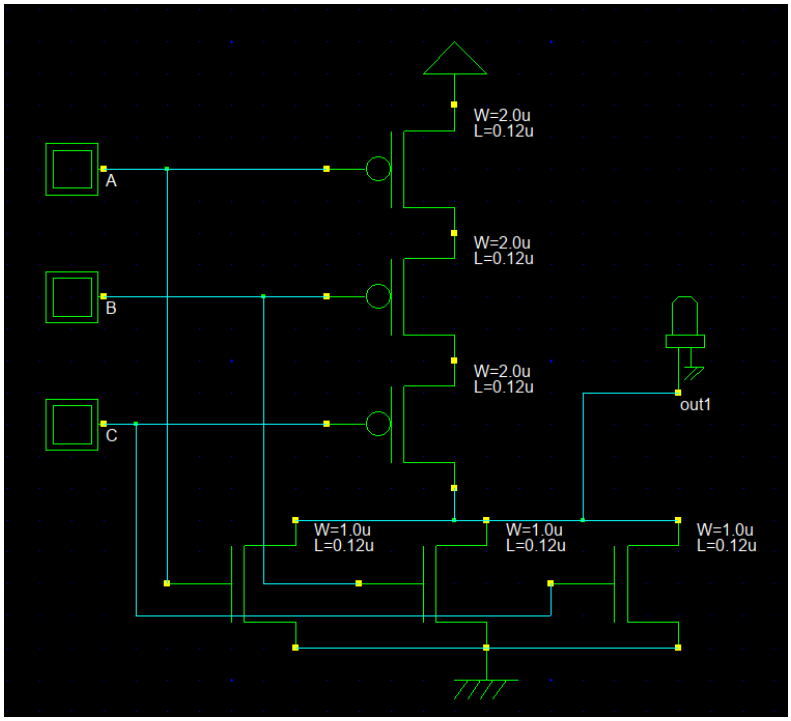

Figure 5: Schematic of the 3-input NOR

Discussion

The 3-input NOR gate was designed in DSCH2 using parallel NMOS and series PMOS transistors. Simulation results confirmed that the output remains HIGH only when all inputs are LOW. The correct logical behavior of the 3-input NOR gate was verified through DSCH2 simulation.

2.6 AND Gate

An AND gate outputs logic HIGH only when all inputs are HIGH.

Truth Table

A	B	Y
0	0	0
0	1	0
1	0	0
1	1	1

Schematic Image

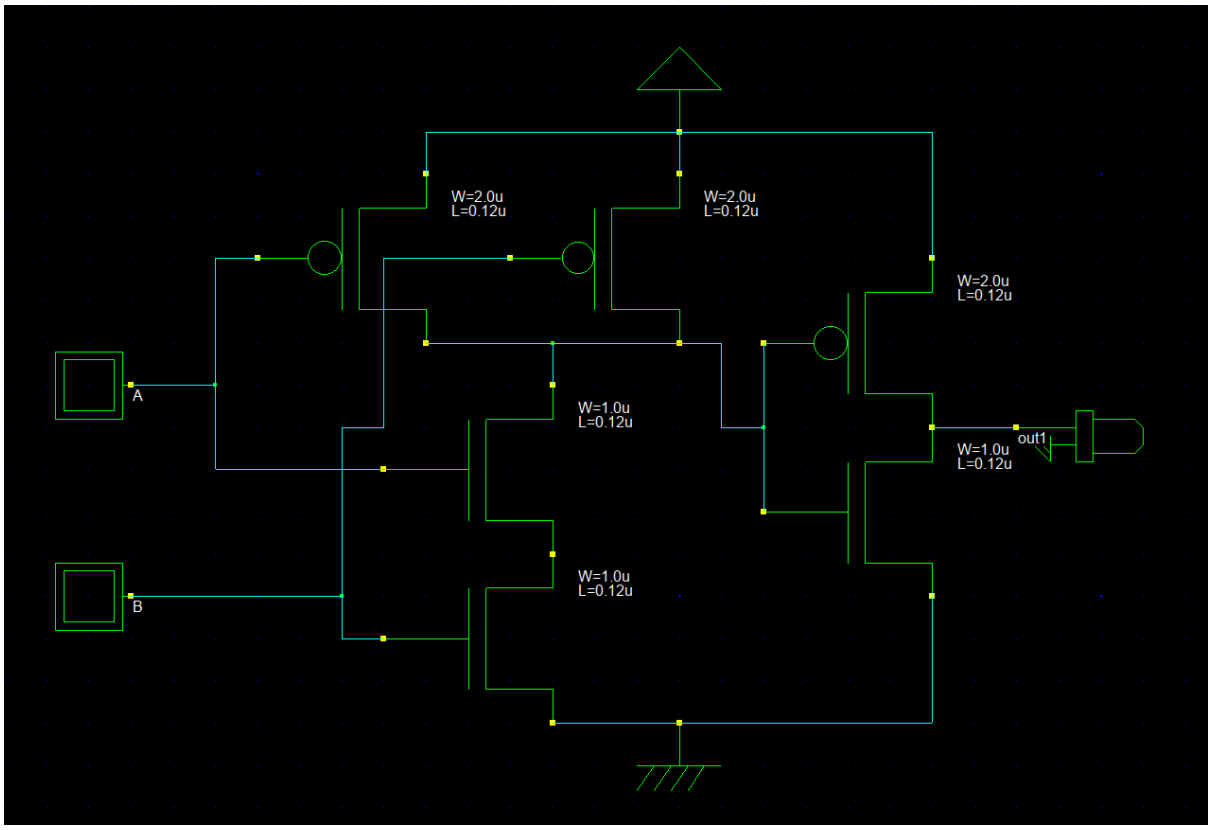

Figure 6: Schematic of the AND Gate

Discussion

The AND gate was implemented in DSCH2 using a combination of NAND and NOT gates. Simulation verified correct output behavior. The AND gate functionality was successfully verified using DSCH2.

2.7 OR Gaate

An OR gate produces logic HIGH when at least one input is HIGH.

Truth Table

A	B	Y
0	0	0
0	1	1
1	0	1
1	1	1

Schematic Image

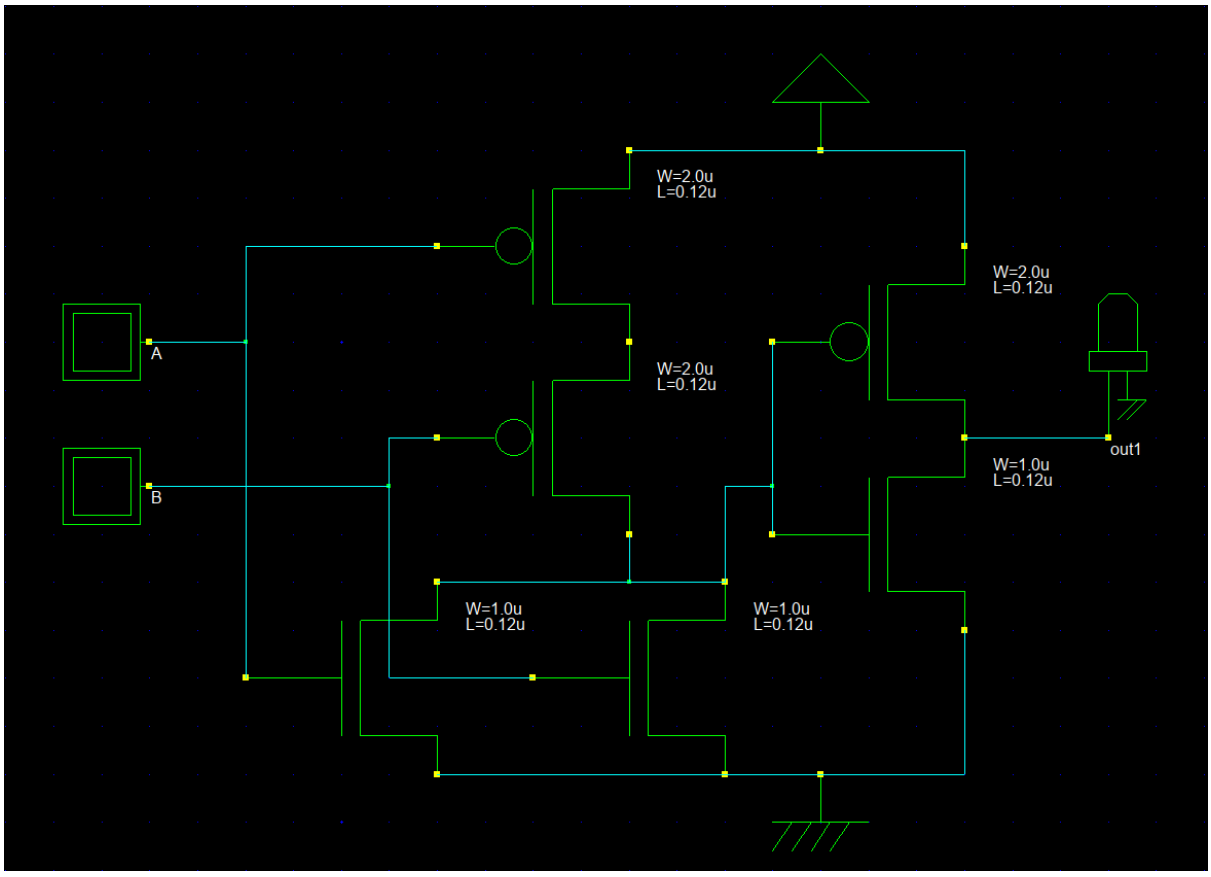

Figure 7: Schematic of the OR Gate

Discussion

The OR gate was constructed in DSCH2 using NOR and inverter combinations. Simulation confirmed expected OR behavior. The OR gate design performed as expected in DSCH2 simulations.

2.8 2-input XOR

An XOR gate outputs logic HIGH when the inputs are different.

Truth Table

A	B	Y
0	0	0
0	1	1
1	0	1
1	1	0

Schematic Image

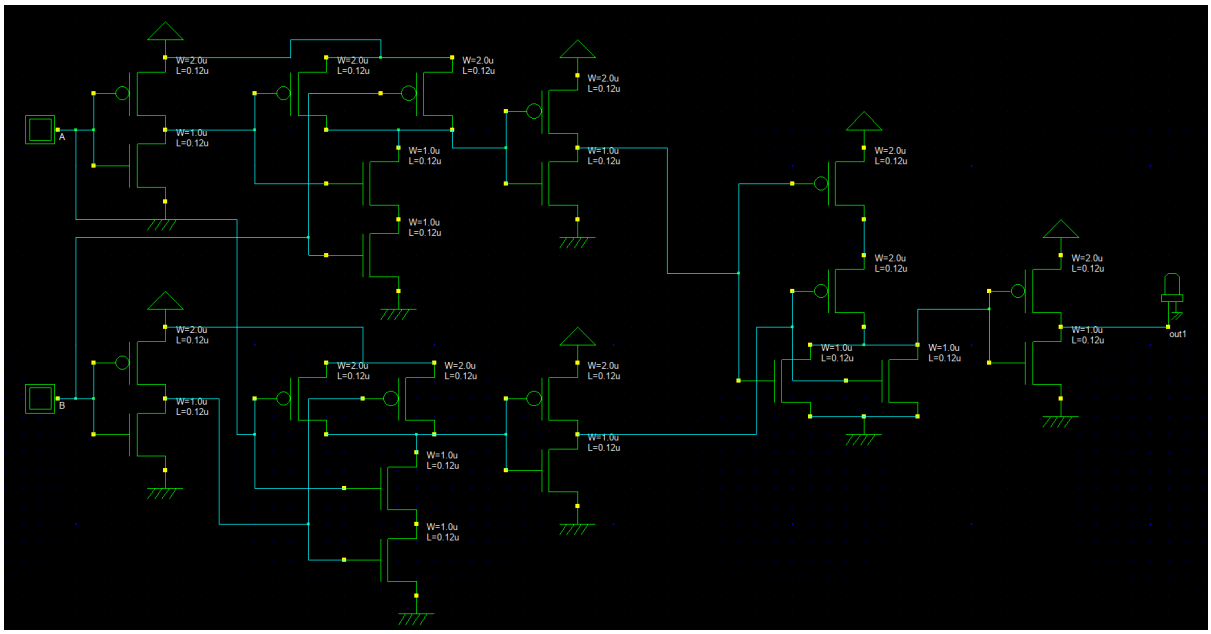

Figure 8: Schematic of the XOR Gate

Discussion

The XOR gate was implemented using a combination of basic logic gates in DSCH2. Simulation verified that the output is HIGH only when inputs differ. The XOR gate schematic functioned correctly, confirming accurate logic implementation using DSCH2.

3 Conclusion

In this laboratory exercise, schematic implementations of fundamental logic gates were created and simulated using the DSCH2 environment. For each gate, the simulated outputs matched the theoretical expectations based on Boolean logic. This laboratory reinforced the fundamental concepts of digital logic design and the practical use of DSCH2 for schematic entry and simulation.